MIX-IT...

PRESENTING THE FULL RANGE OF BEAR VARIMIXERS

Varimixer BEAR

GB

TEDDY 5 L

WITHOUT ATTACHMENT DRIVE

White

Silver

Red

Black

WITH ATTACHMENT DRIVE

White with attachment drive

TOOLS INCLUDED - STAINLESS STEEL

Bowl and lid

Splash guard

Filling chute

Whip

Hook

Beater

ACCESSORIES

Stackable bowls with lids

Bowl lids, food colours

Meat mincer, stainless steel, 62 mm diameter. 4 mm and 8 mm discs included

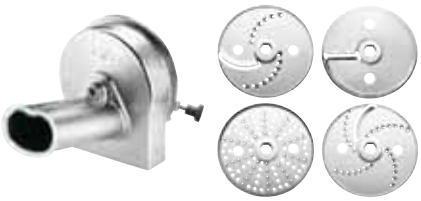

Vegetable cutter, stainless steel. 4 discs with 6 functions included

DIMENSIONS 5 L

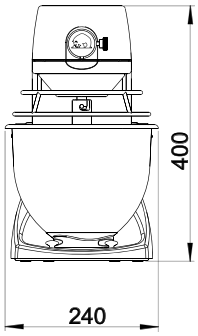

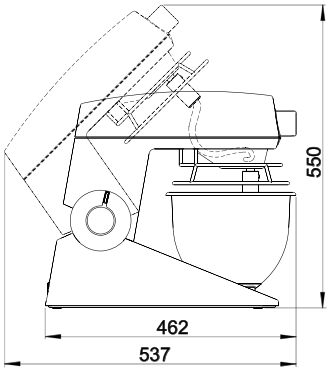

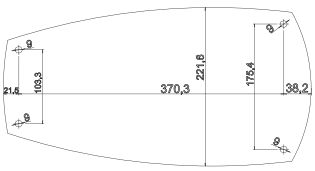

RN10

TABLE OR FLOOR

RN20

TABLE OR FLOOR

STAINLESS STEEL

OPTIONS RN10

Attachment drive

OPTIONS RN20

Attachment drive

Automatic scraper

Removable guard, stainless steel

Removable guard, plastic

ACCESSORIES FOR RN10 AND RN20

70 mm meat mincer, 4.5 mm disc

82 mm meat mincer, 3 mm disc, pre-cutter

Vegetable cutter, GR10 for 10 L and GR20 for 20 L

Stainless steel table for RN10 + RN20 table models

DIMENSIONS RN10

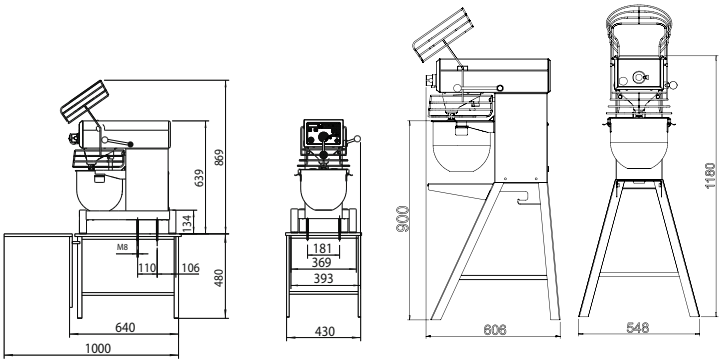

DIMENSIONS RN20

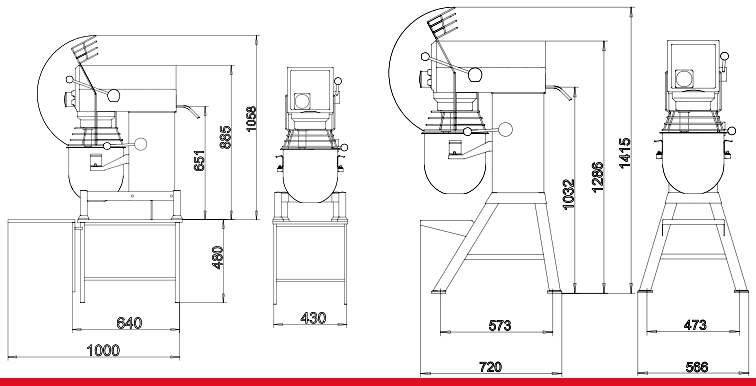

AR30 - AR40 - AR60

NEW MODEL

VL-1

Manuel operation VL-1

VL-1S

Automatic operation VL-1S

WHITE

BLACK

STAINLESS STEEL

OPTIONS AR30 - AR40 - AR60

Automatic scraper, stainless steel

Removable guard, stainless steel

Removable guard, plastic

Attachment drive

ACCESSORIES

Tool rack

Bowl truck

70 mm meat mincer, 4.5 mm disc

82 mm meat mincer, 3 mm disc, pre-cutter

Vegetable cutter GR20

DIMENSIONS AR30

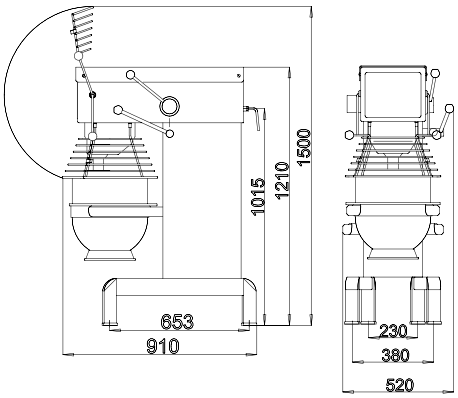

DIMENSIONS AR40

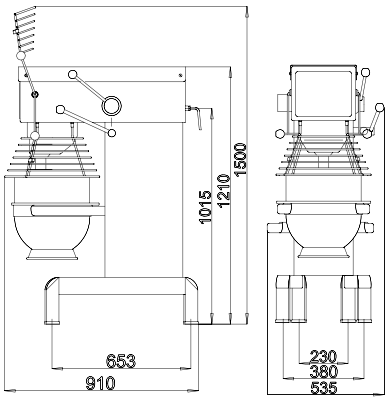

DIMENSIONS AR60

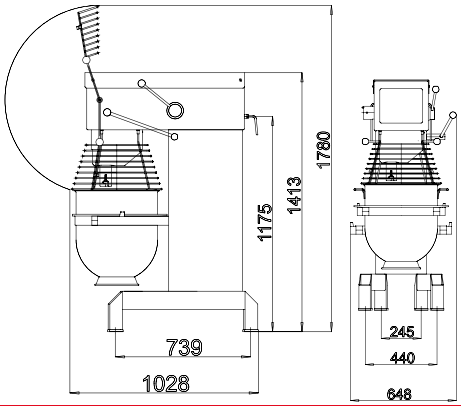

ERGO AE60 - AE100 - AE140

ERGONOMIC MIXERS - IP53

60 L 100 L

WHITE

60 L 100 L 140 L

STAINLESS STEEL

OPTIONS AE60 - AE100 - AE140

Waterproof planetary head, stainless steel, IP54

Double chimney, stainless steel, IP54

Removable splash guard, stainless steel

Automatic scraper, stainless steel

ACCESSORIES

Tool rack

Bowl truck

Easylift

Flexlift

Maxi- and Megalift

DIMENSIONS ERGO AE60

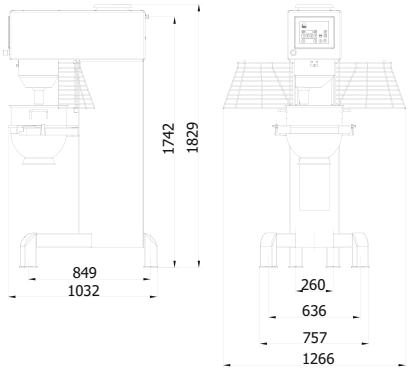

DIMENSIONS ERGO AE100

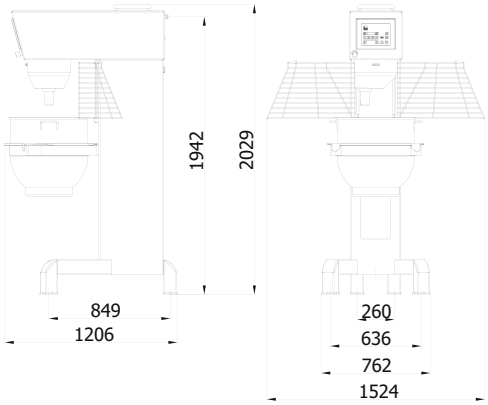

DIMENSIONS ERGO AE140

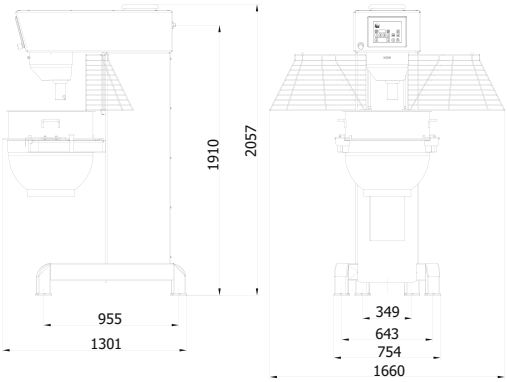

AR80 - AR100 - AR200

LARGE MIXERS

MK-1

Manuel operation MK-1

MK-1L

Semi-automatic operation MK-1L

MK-1S

Automatic operation MK-1S

80 L *100 L* *200 L*

WHITE

80 L *100 L* *200 L*

STAINLESS STEEL

OPTIONS

Attachment drive for AR80

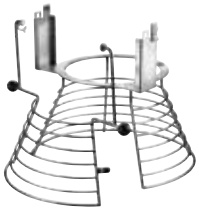

Removable guard, stainless steel

Removable guard, plastic

Automatic scraper, stainless steel

ACCESSORIES

Bowl truck

82 mm meat mincer, 3 mm disc, pre-cutter

Vegetable cutter

Tool rack

DIMENSIONS AR80

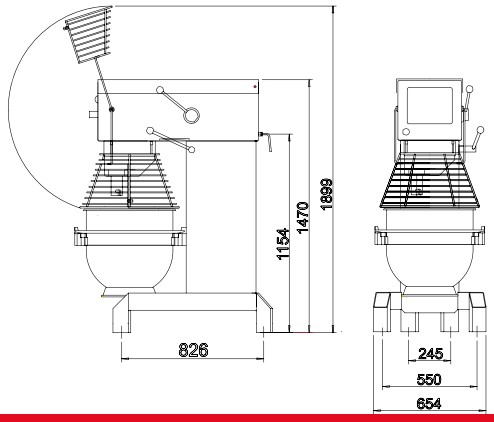

DIMENSIONS AR100

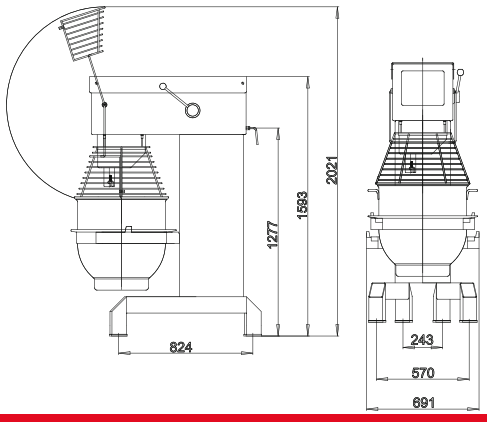

DIMENSIONS AR200

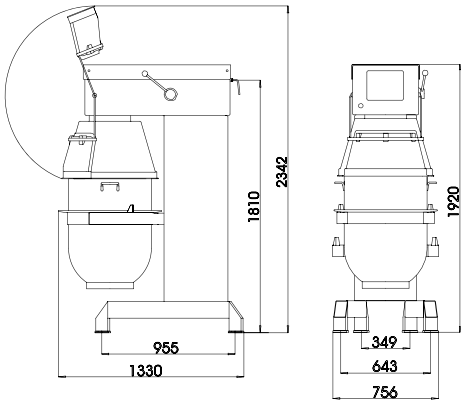

ACCESSORIES

A-EQUIPMENT

B-EQUIPMENT

SPECIAL TOOLS

Wing whip, stainless steel

Reinforced whip, stainless steel

Whip with thinner or thicker wires, stainless steel

Powder mixer, stainless steel

Double pinned hook for pizza version AR40P and AR60P

Colander with 1.5, 3 and 6 mm sieve plates

Ring-gas burner

Air injection bowl

Sausage filler for meat mincers and receiving tray

CAPACITIES

Capacity	5 L	RN10	RN20	AR30	AR40	AR40P	AR60+ AE60	AR60P	AR80	AR100+ AE100	AE140	AR200
Bread dough (50%AR)	2.5 kg	5 kg	10 kg	16 kg	22 kg	32 kg	34 kg	46 kg	50 kg	58 kg	70 kg	-
Mayonnaise	4.4 l	8 l	16 l	24 l	32 l	32 l	48 l	48 l	64 l	80 l	112 l	160 l
Mashed potatoes	2.5 kg	3.5 kg	12 kg	18 kg	23 kg	23 kg	36 kg	36 kg	50 kg	65 kg	95 kg	140 kg
Muffins	2.5 kg	6.5 kg	14 kg	18 kg	24 kg	24 kg	33 kg	33 kg	48 kg	60 kg	85 kg	120 kg
Doughnut	2.5 kg	6 kg	12.5 kg	18 kg	25 kg	36 kg	36 kg	54 kg	50 kg	60 kg	90 kg	-
Egg white	0.7 l	1 l	2.4 l	3.5 l	6 l	6 l	9 l	9 l	12 l	15 l	21 l	27 l

CONTROL PANELS

MIXER SIZE	10 L 20 L	30 L 40 L 60 L	30 L 40 L 60 L	ERGO 60 L ERGO 100 L ERGO 140 L	80 L	100 L 200 L	80 L 100 L 200 L
CONTROL PANEL	**VL-2**	**VL-1**	**VL-1S**	**VL-4**	**MK-1**	**MK-1L**	**MK-1S**
IMAGE							
Manual speed regulation	–	√	–	–	√	√	–
Electrical speed regulation	√	–	√	√	–	–	√
Manual bowl lowering	√	√	–	–	√	–	–
Electrical bowl lowering	–	–	√	√	–	√	√
Automatic bowl lowering	–	–	√	√	–	–	–
Timer with auto-stop	√	√	√	√	Optional	Optional	√
Programmable, Remix	√	–	–	√	–	–	–
Pause function	√	–	√	√	–	–	–
Emergency stop	√	√	√	√	√	√	√

	Volume L	B-equipment L	kW	Standard voltage V	Other Voltage	Frequency	Net weight kg	Variable speed RPM	Meat Mincer	Vegetable cutter
TEDDY 5L	5	-	0.3	230V	Other voltage power supply are available upon request in the range of 100 to 480 V.	All standard and marine mixers are available in 50 and 60 Hz.	18	78 - 422	62 mm	3VC
RN10 table	10	-	0.7	230V			51	110 - 420	62+70 mm	3VC+GR10
RN10 floor	10	-	0.7	230V			63	110 - 420	62+70 mm	3VC+GR10
RN20 table	20	12	1.2	230V			82	98 - 375	70+82 mm	GR20
RN20 floor	20	12	1.2	230V			87	98 - 375	70+82 mm	GR20
AR30	30	15	1.0	400V			170	57 - 311	70+82 mm	GR20
AR40	40	20	1.1	400V			180	53 - 294	70+82 mm	GR20
AR40P (PIZZA)	40	20	1.85	400V			180	53 - 294	70+82 mm	GR20
AR60	60	30	1.85	400V			275	53 - 288	70+82 mm	GR20
AR60P (PIZZA)	60	30	3.0	400V			275	53 - 288	70+82 mm	GR20
AR80	80	40	3.0	400V			340	47 - 257	70+82 mm	GR20
AR100	100	40+60	3.0	400V			395	47 - 257	-	-
AR200	200	-	4.0	400V			560	47 - 257	-	-
ERGO BEAR 60	60	30	3.0	400V			330	53 - 288	-	-
ERGO BEAR 100	100	40+60	4.0	400V			428	47 - 257	-	-
ERGO BEAR 140	140	-	5.5	400V			525	47 - 257	-	-

Manufacturer:

A/S Wodschow & Co.
Kirkebjerg Søpark 6
DK-2605 Brøndby, Denmark
Phone: +45 43 44 22 88
E-mail: info@wodschow.dk
www.bearvarimixer.com

Distributor:

We are not responsible for printing errors and reserve the right to change the product specifications.

TEDDY, ERGO BEAR and BEAR Varimixer are registered trade marks belonging to A/S Wodschow & Co.